FUKUTA®
The Energy Within

General-purpose / Advanced Variable Frequency Drive

FKT158, FKT168 Series
AC Drives Product Catalog
0.75~450kW





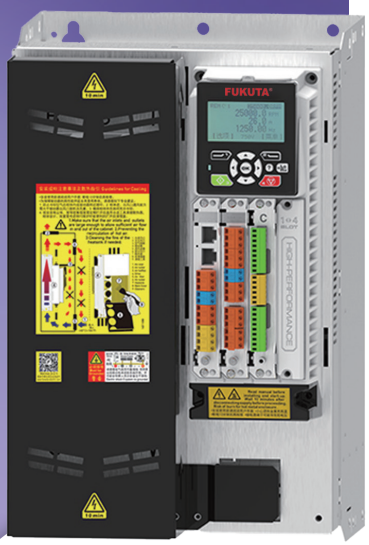

COMPANY PROFILE

Since its establishment in 1988, FUKUTA Electric has been dedicated to the research, design, and manufacturing of industrial motors. Under the leadership of our founder and Chairman, Mr. Chin-Feng Chang, we have continued to grow based on the core values of innovation, passion, integrity, people-centered management, and shared prosperity. Today, our products are marketed worldwide under the FUKUTA brand.

At FUKUTA, we are committed to providing products that offer reliable quality at a reasonable cost. With strong in-house R&D capabilities, we are able to support customized requirements, enhance product performance, and help our customers strengthen their competitiveness and brand value. Guided by the spirit of “We take on what others won’ t,” we work closely with our customers to develop new opportunities and create greater value together.

Through years of continuous development and changing market demands, FUKUTA has evolved from a traditional industrial motor manufacturer into a developer and manufacturer of electric vehicle motors and integrated powertrain systems.

Since 2005, FUKUTA has participated in a wide range of electric vehicle motor and powertrain development projects in Taiwan and overseas. The practical experience gained from these projects enables us to help customers reduce development risks, shorten lead times, control costs, and move new products into mass production more efficiently.



CONTENTS

Product Overview

Product Overview & Industry Applications	p.3
Product Features	p.5
Performance Advantages	p.6
Compatibility Advantages	p.7
Functional Advantages	p.8
Reliability Advantages	p.9
Product Features & Technical Data	p.10

Product Selection (Ratings, Models & Voltage)

FKT168	p.11
FKT158	p.13
Extended Features & Optional Accessories	p.16

BEST FOR YOUR APPLICATIONS

Drive with Greater Precision. Achieve Higher Energy Efficiency.

FKT Series Drives (Servo / Variable Frequency Drive)

From zero-speed operation to fans, compressors, and other HVAC applications with high energy-saving requirements, the FKT Series delivers fast response, precise torque control, and efficient motor operation. Whether paired with traditional induction motors or high-efficiency permanent magnet synchronous motors, FKT drives combine advanced direct torque control with high-performance vector control to provide accurate, responsive, and reliable motor control.

Its advanced torque control technology enables high-performance sensorless operation, making it an ideal alternative to closed-loop vector control or DC motor applications where position feedback is not required. When used with permanent magnet synchronous motors, the FKT Series also supports direct-drive applications in low-speed industrial equipment, helping eliminate gear reducers, simplify system configuration, and improve overall transmission efficiency.

The FKT Series is equipped with a user-friendly LCD keypad with both Chinese and English interfaces, making parameter setup, commissioning, routine maintenance, and troubleshooting easier and more convenient. Designed for demanding industrial environments, the series also features high overload capacity and reliable operation for long-term performance.

ACS Series drive Overview

	Product Image	Main Model	Power Range	Typical Applications	Key Highlights
Standard Performance	 	FKT-158 General-Purpose Drive	0.75~250kW	• Pumps & Fans • Conveyors • General Machinery • Water Treatment • Simple Closed-Loop • HVAC Systems • General Machine Tools • Ceramic Production • Woodworking • Glass Processing • Compressors • Centrifuges • Water Treatment Equipment • Food Processing • Textile Machinery • High-Speed Fans • Screw Pumps • Stone Processing • Industrial Washing Machines • Grinding Machines • Plastic Machinery	• Compact Design • Easy to Operate • PM Synchronous • Simple Closed-Loop • Flexible Expansion • Fast and Easy Commissioning • Excellent Energy Efficiency • Supports Multiple Motor • Standard LCD Keypad
High Performance	  	FKT-168 Industrial Drive	0.75~450kW	• Industrial Drives • Lifting • Winding Applications • Oil Pumping • Precision Machine Tools • Printing & Packaging Equipment • Multi-Speed Feedback Control • Permanent Magnet Synchro-nous Motor • DC Motor Replacement • Electromagnetic or Mechani-cal Mixing • High-Speed Centrifuges • Dynamometer Test Benches • Power Take-Off Systems • Rolling Mills • Steel Processing Equipment	• Excellent Energy-Saving Performance • Excellent Closed-Loop Control Performance • Supports Multiple Motor Types • High Control Accuracy and Dynamic Performance • Advanced Permanent Magnet Synchronous Motor Control • High Reliability with Versatile Functions • Supports Mainstream High-Speed Fieldbus Networks • Excellent High-Speed and Field-Weakening Control Performance

Advanced Torque Control for Superior Energy Savings

Lower energy consumption and higher efficiency without compromising productivity

- Excellent magnetic flux optimization technology is adopted to realize industry leading energy saving effect. Always keep the stator and rotor magnetic field angle vertical. Minimize the loss of useless power during motor operation.

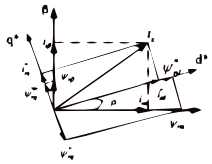

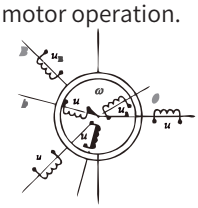

NEW

- Magnetic flux optimization technology (Induction motor): Always adjust the magnetic flux at its best to minimize motor losses for higher energy savings while lower noise level.

  For example:
  25% motor load can increase 10% of the total efficiency, 50% load can increase 2% of the total efficiency.

- It can be used to realize direct drive control on low-speed industrial equipment with permanent magnet synchronous motor without speed reducer, saving cost and optimizing process control.

NEW

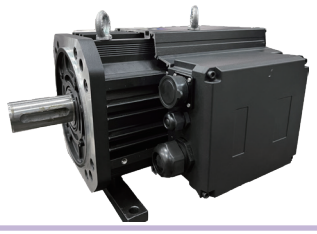

- Outstanding driving performance can be achieved without sensors. In 95% of applications, there is no need for motor speed feedback or position feedback, reducing the installation of expensive encoders or other feedback devices and improving the reliability of transmission equipment.
- The current is smaller under the same load, the torque is bigger under the same current.

NEW

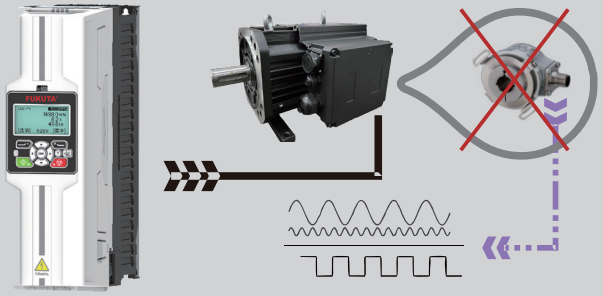

- It can drive induction motors, permanent magnet motors, servo motors, synchronous reluctance motors and magnetic levitation motors, achieving higher energy efficiency and better control of the latest hybrid special-type motors.
- It can be combined with synchronous reluctance motors to improve the overall energy efficiency of the equipment.

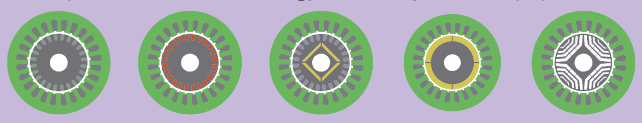



Excellent drive performance

Better optimize the production process control
Improve the product quality, consistency of quality and product ion efficiency of industrial equipment manufacturing

Fast torque response, high torque linearity

The torque response time (the time from 0 step to rated torque) of open-loop applications is less than 3ms, and the torque repeatability is less than or equal to 1%, which is comparable to closed-loop vector or DC drives.

▪ Application advantages

1. It can significantly improve the production process control and enhance the quality and consistency of machine-processed products in the winder application type industrial equipment which reduce the investment on sensor usage and increase equipment reliability, especially applied in the machine processing of papermaking, textile, film, coating, wire, printing and packaging, and various adhesive tape extensible.
2. It can be used to replace DC motor with permanent magnet synchronous motor, which can save the workload and cost of equipment maintenance.

Fast Dynamic Response, High Speed Accuracy

The dynamic response accuracy of the speed loop is up to 0.4%.
In open-loop applications, speed accuracy is within 0.5%, and no sensor is required in approximately 95% of applications.
The maximum operating frequency is up to 500 Hz, and can reach 2,000 Hz or higher on dedicated models.

• Application Benefits

1. Improves machining quality and product consistency.
2. Reduces sensor-related costs while improving overall system reliability.
3. Enables ultra-fine surface finishing when cutting or grinding hard, wear-resistant materials such as metal, glass, and ceramics.
4. Provides fast response to load changes in applications such as ultra-high-speed motor drives, gas turbine power generation, and marine shaft generators, helping maintain stable power output under varying loads.

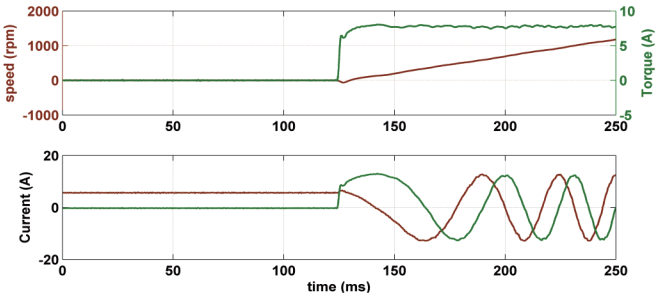

High Torque at Low Speed for Ultra-Smooth Operation

Sensorless control delivers up to 200% torque at zero speed.
Open-loop control supports 200% starting torque at zero speed.
The drive can maintain 200% torque at zero speed for up to one minute.

• Application Benefits

1. **Supports 1:1 drive-to-motor sizing without oversizing the drive due to insufficient starting torque.** This helps optimiz drive and motor selection for applications such as ball mills, stone cutting machines, industrial washing machines, centrifuges, mixers, agitators, punching machines, forging equipment, and lifting machinery.
2. **Provides zero-speed brake release in open-loop crane applications, helping reduce hook slip and reverse shock.**The drive can operate smoothly under loads of up to 150% in both lifting and lowering directions. When combined with intelligent anti-sway control, it can significantly improve productivity, operator comfort, and operational safety.

Fast Acceleration and Deceleration

Supports rapid acceleration, deceleration, and forward/reverse switching while staying within mechanical limits, helping optimize production cycles and improve productivity.

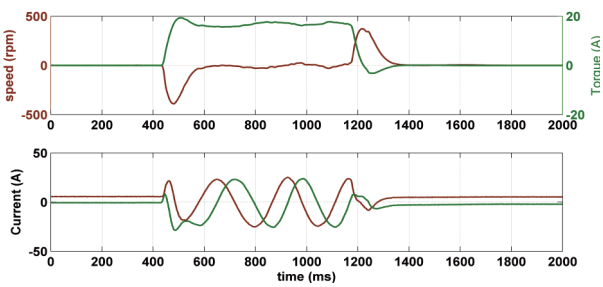

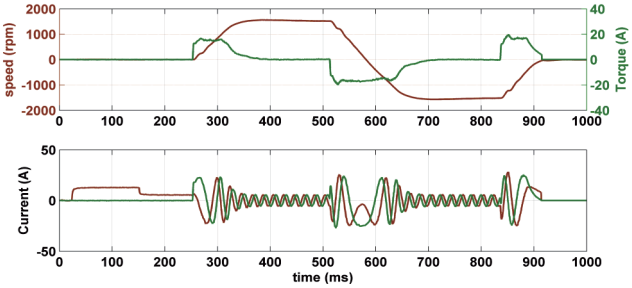

Broad Compatibility

Flexible expansion options support all major motor types on the market, giving the product greater versatility across a wide range of applications.

Supports Mainstream Communication Protocols

- Optional PROFINET communication
- Optional EtherCAT communication
- Optional MODBUS-TCP communication
- Standard CANopen communication
- Optional PROFIBUS-DP communication
- Remote Diagnostics

Built-In Braking Unit for Low- and Medium-Power Models

Integrated braking unit design reduces wiring and saves installation space.

- Built-in braking unit standard on models rated 22/30 kW and below
- Built-in braking unit available as an option on 30/37–250 kW models

Supports Single or Dual Encoders (M3/M4)

- Open-collector encoder
- Differential-output encoder
- Resolver
- Rotary transformer encoder
- Single- or multi-turn absolute encoder
- Single- or multi-channel magnetoresistive encoder
- See the option list and model-specific wiring diagrams for details

EMC and Enhanced Protection Design

- The input side is equipped with a built-in C3 EMC filter compliant with EN 61800-3, Category C3.
- X3 and above models feature a built-in DC reactor to improve power factor while reducing harmonic distortion, electrical noise, and interference.
- Medium- and high-power E-series models are equipped with built-in output common-mode filters, helping reduce high-frequency emissions and minimize bearing-current stress on the motor.

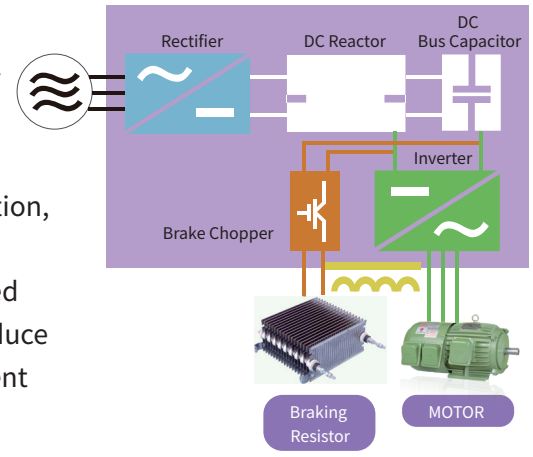

Rich Functionality, Easy Operation

Comprehensive system functions are designed to meet the diverse drive-control needs of different industries. With a large bilingual LCD interface in Chinese and English, users can quickly and clearly monitor operating information and control the drive with ease.

Built-In Motion Control

- Electronic cam control for applications such as tracking, flying shear, and servo press
- Multi-axis synchronization
- Position synchronization
- Torque synchronization
- Winding / unwinding control

Advanced Functions

- Maximum voltage control for overvoltage prevention
- Minimum voltage control for undervoltage control and power-loss ride-through
- Automatic tracking start for fast motor speed detection
- Fast and stable switching between open-loop

Assistant LCD Keypad

- Large, high-brightness industrial LCD display
- Chinese and English language support
- Real-time monitoring of system parameters and operating status
- Detailed fault records and troubleshooting information
- Parameter upload, download, and storage
- Real-time monitoring of key I/O status
- Supports hot-plugging and standard network extension

Functional Safety with Built–In STO

Built-In STO (Safe Torque Off) for Safe Motor Shutdown

- Complies with EN/IEC 61800-5-2
- Complies with IEC 61508 ed.2, SIL 3
- Complies with EN/IEC 62061, SIL CL3
- Complies with EN ISO 13849-1, PL e

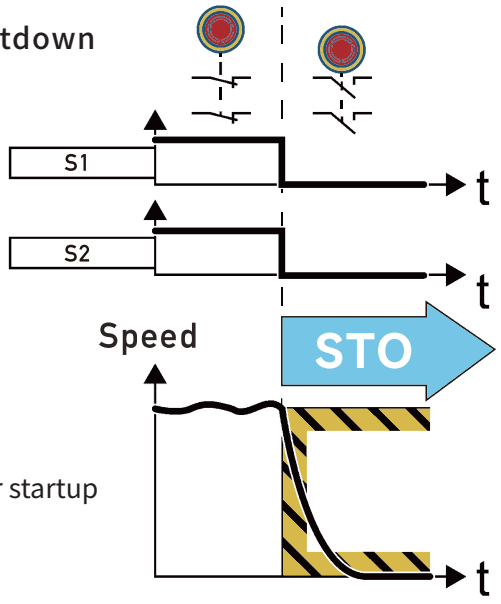

Simplifies Safety Circuit Design

- Reduces space requirements and wiring
- Reduces the need for external contactors
- Helps lower system cost and simplifies maintenance
- Helps reduce safety risks associated with unexpected motor startup

Reliability & Safety

Reliability and safety are top priorities throughout our product design and manufacturing processes.

Comprehensive System Protection

- Drive protection: short circuit, overcurrent, overvoltage, undervoltage, input/output phase loss, overload, and overtemperature protection
- Motor protection: overload and overtemperature protection
- Braking circuit protection: braking unit overload, braking unit short circuit, braking resistor protection, and more
- Ride-through functions: instantaneous power-loss ride-through, power-loss ride-through, stall prevention,

Key Component Selection

- Uses mainstream components from leading global brands
- Strict component selection and qualification testing
- Professional derating design for improved reliability

Comprehensive Thermal Management

- Industry-leading IGBT junction temperature monitoring technology accurately calculates IGBT junction temperature to provide effective protection for the IGBT module
- Thermal management takes changing ambient temperatures into account, enabling comprehensive heat management and faster thermal response
- High-efficiency, high-precision thermal simulation is used together with stringent industry test standards to improve overall thermal reliability

Rigorous Full-System Quality Testing

- Full-load and overload high-temperature aging tests at 100%–120% of rated load
- Highly automated digital testing procedures help ensure product consistency and traceability



Technical Data

FKT SERIES

Optional software and hardware configurations are available to meet different application needs. Use the model numbering structure below to select the appropriate drive.
For model details, dimensions, power ratings, and voltage ranges, refer to the selection tables or contact your local FUKUTA sales representative.

Naming Rules

Model: FKT 1 | 158/168 2 – XXX 3 – XXAX 4 – 3 5 B 6 + XX 7

1	2	3	4	5	6	7
Product Family	Product Series	Frame Type	Rated Capacity	Voltage	Built-In Braking Unit	Functions & Options

Main Power Supply	
	Single-phase: U_N2 = AC 1/3P 220 V (-15% / +10%), max. 260 V Three-phase: U_N3 = AC 3P 380 V (-15% / +10%), max. 490 V
Frequency	50 to 60Hz ± 5%
Power Factor	cos Ø = 0.98
Efficiency (at Rated Power)	0.98
DC Bus Voltage	485 to 675 V DC ± 10%

Product Series	Advanced Torque Control Series
Motor Connection	
Motor Type	AC Induction Motors, Permanent Magnet Motors, and Synchronous Motors
Output Voltage	Three-phase output voltage: 0 to $U_N2/U_N3/U_N6$
Output Frequency	0 to 500 Hz Note: For higher frequencies, please refer to separate documentation
Motor Control	Advanced Torque Control
Torque Control:	Torque Response Time
Open loop:	< 3 ms at rated torque
Closed loop:	< 3 ms at rated torque
	Nonlinearity
Open loop:	±4% at rated torque
Closed loop:	±3% at rated torque
Speed Control:	Static Accuracy:
Open loop:	10% of motor slip
Closed loop:	0.01% of rated motor speed
	Dynamic Accuracy
Open loop:	0.3–0.4% at a 100% torque step
Closed loop:	0.1–0.2% at a 100% torque step

Product Series	Flux Vector Control Series
Motor Connection	
Motor Type	AC Induction Motors and Permanent Magnet Motors
Output Voltage	Three-phase output voltage: 0 to $U_N2/U_N3/U_N6$
Output Frequency	0 to 500 Hz (Vector)，0 to 1000 Hz (V/F)
Motor Control	Vector or V/F Control Note: For higher frequencies, please refer to separate documentation
Torque Control:	Torque Rise Time
	< 10 ms at rated torque
	Nonlinearity:
	±5% at rated torque
Speed Control – Open Loop	Static Accuracy:
	20% of rated motor slip
	Dynamic Accuracy:
	< 1% at a 100% torque step
Speed Control – Closed Loop	Static Accuracy:
	0.1% of rated motor slip
	Dynamic Accuracy:
	< 1% at a 100% torque step

Brake	
Brake Chopper Brake Resistor	Standard on RX, X2X, and X3X frames; built-in option available for X4X–X8X frames. Except for certain dedicated low-power, low-inertia drives, an appropriate external braking resistor is required.

Fieldbus Communication	
Modbus-RTU (standard on all models) TCP/IP (standard on E Series models)	EtherCAT、PROFINET、CANopen, , and other TCP/IP-based communication options EtherCAT CANopen

Environmental Conditions	Ambient Temperature
Transport / Storage	-40°C to +70°C; for liquid-cooled models, no liquid may remain in the cooling circuit below 0°C.
Operation (Air-Cooled)	-10°C (no frost) to +40°C; operation up to +50°C with 1% derating per °C above 40°C
Operation (Liquid-Cooled)	-10°C (no condensation) to +50°C; 1% derating per °C above 40°C
Cooling Air Requirements	Dry, clean air free of conductive dust, fibers, and corrosive substances
Coolant Requirements	Pure water, potable water, or a water/ethylene glycol mixture, free of scale, biological contamination, and substances that may attack aluminum
Relative Humidity	0–95% RH, non-condensing, non-corrosive, and free from dripping water
Installation Altitude	0–1000 m: no derating 1000–4000 m: derate by 1% per 100 m
Protection Rating	IP00 (AIM, R7, R8, L8 and other modular series; for indoor/cabinet installation only) IP20 / UL Type 1 (R1, C/E2/3/4/5/6/7/8/B; for indoor/cabinet installation only)
Enclosure Color	RAL 9017/9002 ,RAL 9017/7035
Pollution Degree	Conductive dust is not permitted
Storage	IEC 60721-3-1: Class 1C2 (chemically active substances); Class 1S2 (mechanically active substances)
Transportation	IEC 60721-3-2: Class 2C2 (chemically active substances); Class 2S2 (mechanically active substances)
Operation	IEC 60721-3-3: Class 3C2 (chemically active substances); Class 3S2 (mechanically active substances)

C=Chemically Active Substances
S=Mechanically Active Substances

For applications requiring higher output frequencies, please contact your local FUKUTA sales office.

FKT168 Wall-Mounted Drive Series for Stand-Alone Applications

Three-Phase Input, Un = 400 V (380–415 V)										*Rated power applies at a rated voltage of 400 V (1.5—450 kW). Select based on rated and peak load current.*		
Rated Values			Light-Duty Applications		Heavy-Duty Applications		Noise Level	Heat Dissipation	Cooling Airflow	Model Code	Minimum Braking Resistor for Built-In Brake Chopper (Ω)	Frame Size (mm)
P_N kW	I_N A	I_{max} A	I_{LD} A	P_{LD} kW	I_{HD} A	P_{HD} kW	dBA	kW	m^3/h			
1.5	3.3	4.1	3.1	1.5	2.4	0.75	45	0.05	25	FKT168-E22-03A3-3B	>=72Ω	E2 (W100 H300 D230)
2.2	5.6	6.8	5.3	2.2	4.0	1.5	45	0.076	30	FKT168-E23-05A6-3B	>=72Ω	
4.0	9.8	12	8.8	4.0	5.6	2.2	45	0.097	40	FKT168-E24-09A8-3B	>=72Ω	
5.5	12.9	16	12	5.5	9.4	4.0	45	0.175	50	FKT168-E25-12A9-3B	>=72Ω	
7.5	17	21	17	7.5	13	5.5	45	0.21	55	FKT168-E26-017A-3B	>=39Ω	
11	25	30	24	11	17	7.5	45	0.33	60	FKT168-E27-025A-3B	>=39Ω	
15	32	42	32	15	25	11	57	0.5	100	FKT168-E32-032A-3B	>=20Ω	E3 (W145 H400 D270)
18.5	38	54	37	18.5	32	15	57	0.55	125	FKT168-E33-038A-3B	>=20Ω	
22	45	64	45	22	38	18.5	57	0.66	145	FKT168-E34-045A-3B	>=20Ω	
30	61	76	58	30	45	22	59	0.89	200	FKT168-E42-061A-3/B[1)]	>=10Ω	E4 (W250 H400 D300)
37	72	104	71	37	61	30	59	1.12	250	FKT168-E43-072A-3/B[1)]	>=8Ω	
45	87	122	85	45	75	37	59	1.15	290	FKT168-E44-087A-3/B[1)]	>=8Ω	
55	105	148	110	55	91	45	59	1.2	320	FKT168-E52-105A-3/B[1)]	>=5.2Ω	E5 (W290 H680 D350)
75	145	179	143	75	112	55	59	1.44	340	FKT168-E53-145A-3/B[1)]	>=5.2Ω	
90	169	247	176	90	150	75	67	1.94	400	FKT168-E54-169A-3/B[1)]	>=3.3Ω	
110	206	287	212	110	184	90	67	2.2	550	FKT168-E62-206A-3/B[1)]	>=2.3Ω	E6 (W290 H680 D350)
132	246	350	241	132	225	110	67	3.3	650	FKT168-E63-246A-3/B[1)]	>=2.3Ω	
160	293	418	283	160	266	132	68	3.85	680	FKT168-E72-293A-3/B[1)]	>=1.7Ω	E7 (W425 H900 D390)
200	363	498	355	200	293	160	68	4.1	700	FKT168-E73-363A-3/B[1)]	>=1.7Ω	
250	487	545	450	250	387	200	68	46.6	720	FKT168-E74-487A-3/B[1)]	>=1.7Ω	
280	546	628	526	280	480	250	68	5.1	950	FKT168-E83-546A-3		E8 (W380 H1660 D535)
315	624	718	615	315	546	280	68	5.8	1100	FKT168-E84-624A-3		
400	760	874	760	400	638	355	68	6.3	1200	FKT168-E85-760A-3		
450	865	1080	865	450	760	400	68	7.8	1350	FKT168-E86-865A-3		

Input /Output Ports for E type farme

FKT SERIES

Frame

E

FKT168



The E Series control unit features a modular design with flexible expansion options. It supports multiple standard interfaces and optional high-speed fieldbus interfaces. The diagram below shows the standard interfaces and functions of the general-purpose configuration. For details, refer to the user manual or contact your local FUKUTA representative.

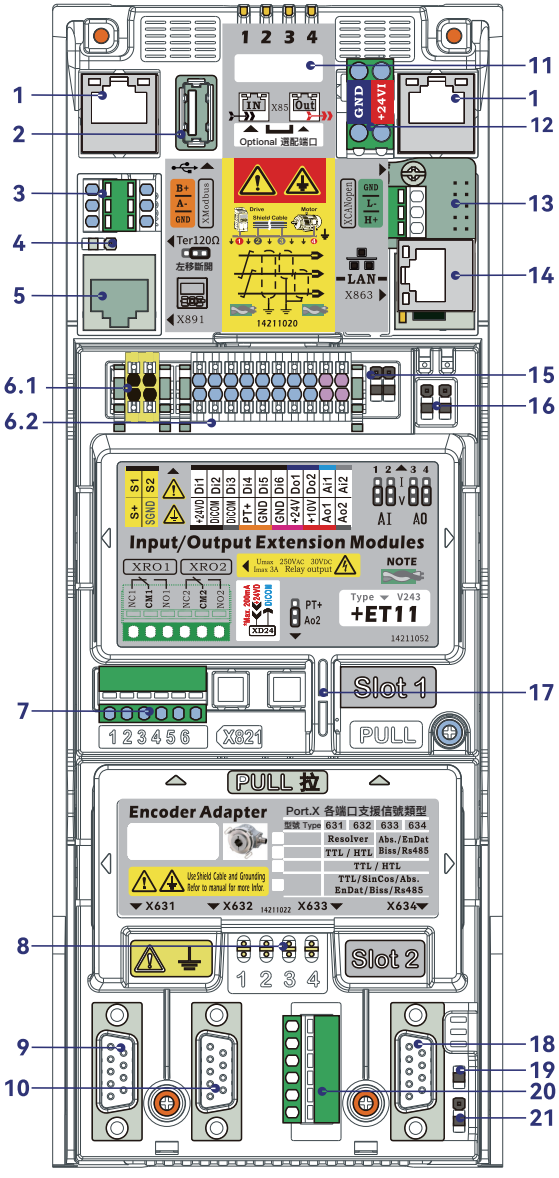

1	X851/2	⚠ [Optional] Real-time high-speed fieldbus interface for standard EtherCAT / PROFINET communication options. Configure as E3EC or E3PN according to the option label.
2		USB port for portable parameter transfer and setup.
	XModbus Communication Terminal	
3	B+ A+ GND	High-speed Modbus communication, physical layer: EIA-485. Used for standard fieldbus control. Refer to the manual for protocol configuration. Route the GND wire along with the A/B twisted pair to improve EMC immunity.
4	Ter120Ω	120 Ω Modbus termination resistor; disconnect the jumper on the left to disable.
5	X891	Keypad interface. Maximum extension distance: 30 m, depending on cable quality and electrical environment.
	STO Safe Torque Off Interface	
6.1	S1、S2	Dual-channel feedback signal inputs for the STO function. On some models, these correspond to DI5/DI6.
	S+、SGND	S+ provides an internal +24 V supply. SGND is the GND terminal when an external 24 V supply is used for STO.
	XPT Temperature Sensor Interface	
	PT+ GND	Real-time temperature monitoring for the controlled motor or related components. Supports KTY84, PT100, PT1000, PTC, etc. Configuration is required in the parameters. Use shielded, tightly twisted, insulated wiring.
	XPWOut Internal Power Output Interface	
	GND	Common terminal for analog I/O and DO1/DO2.
	+24V	DC +24 V, max. 400 mA, for external low-power sensors and similar devices.
	+10V	Reference voltage for external potentiometer adjustment only; recommended potentiometer value: 1–10 kΩ.
	XAO Analog Output Interface	
	AO1 AO2	Supports 0–20 mA output (RL ≤ 500 Ω) or 0–10 V DC output. Configurable for motor speed, torque, current, and other monitoring signals. Shielded twisted-pair cable is recommended.
	XAI Analog Input Interface	
	AI1 AI2	Current input: -20 to +20 mA / 0–20 mA, Rin = 100 kΩ Voltage input: 0 to +10 V / -10 to +10 V, Rin = 500 Ω
6.2	**XD24V Digital I/O Auxiliary Power Interface**	
	+24VD	DI reference supply: +24 V DC, 0–200 mA. Can also be used to power external devices such as encoders.
	DiCOM	Common terminal for digital inputs DI1–DI6
	XDI Digital / High-Speed Pulse Input Interface	
	DI1 DI2	DI1:Default: Stop (0) / Run (1)，DI2:Default: Forward (0) / Reverse (1) DI1 and DI2 can also be configured for other functions.
	DI3 DI4 DI5 DI6	Functions can be assigned through parameters as required. DI1–DI3 support switch-type digital inputs. DI4–DI6 support digital or high-speed pulse inputs, with a maximum frequency of 100 kHz. They can also accept signals from A, B, and Z channels of incremental encoders and can be configured for NPN/PNP encoder applications.
	XDO Digital Output / High-Speed Pulse Output Interface	
	DO1 DO2	Supports switching output (<0.5 A) and high-speed pulse output (f = 120 kHz). Output functions can be configured through parameters, including PNP output and general high-speed pulse output. Common terminal is GND.
	XRO Relay Outputs	
7	NC1 CM1 NO1	RO1: Run status; configurable for other functions. 250 V AC / 30 V DC, 3 A
	NC2 CM2 NO2	RO2: Fault status; configurable for other functions. 250 V AC / 30 V DC, 3 A
8	1 2 3 4	Four LED indicators showing the connection/operating status of ports 631/632/633/634.
9	631	⚠ Multi-function, wide-voltage real-time feedback and configurable frequency output (selected models). Supports position/speed feedback and optional Resolver / TTL / HTL / SinCos / Absolute Encoder / EnDat / BiSS / RS485 interfaces.
10	632	Optional interface: Resolver / TTL / HTL / SinCos / Absolute Encoder / EnDat / BiSS / RS485.
11	Label Position	EtherCAT / PROFINET label position, indicating the control-board type.
12	24VI (+) GND (-)	External 24 V DC, 1 A input. On some models, this port can power the control section for parameter setup and commissioning when the main power supply is unavailable.
	CANopen Communication Option	
13	GND L- H+	⚠ Galvanically isolated high-speed CANopen communication (EIA-CAN). Refer to the manual for settings. Configurable termination resistor. Route GND with the CAN twisted pair for better EMC immunity. [Optional] Route GND with the shielded A/B twisted pair to improve EMC immunity.
14	LAN X863	Ethernet / IP TCP/IP, RJ45 For remote monitoring, communication with local computers, and other Ethernet-based functions.
15	AI	AI jumper: upper position = current input; lower position = voltage input
16	AO	AO jumper: upper position = current output; lower position = voltage output
17	PT+ /AO2	Selects PT+ or AO2 via jumper: upper position = PT+; lower position = AO2
18	634	⚠ Multi-function, wide-voltage, multi-channel real-time feedback and configurable frequency output (selected models). Supports position and speed feedback.
20	633	Optional interfaces include Resolver / TTL / HTL / SinCos / Absolute Encoder / EnDat / BiSS / RS485.
19 21	J5/PE/J6	Jumper caps for connecting GND/DiCOM to chassis PE. Depending on EMC requirements, the jumpers may be removed.

FKT158 Wall-Mounted Single Drive Series

Single/Three-phase input Un=220V (208-240V), rated power valid at 220V (0.75-3.7kW). *Select by rated/peak load current.								
Nominal ratings			Noise level	Heat diss.	Air flow	Type designation	Built-in brake chopper adapts to the minimum resistance value(Ω)	Frame size (mm)
P_N kW	I_N A	I_{max} A	dBA	kW	m^3/h			
0.75	4.8	6	40	40	25	FKT158-R11-04A5-1B	>=40Ω	R1[2] (W78 H210 D145)
1.5	7.5	10	40	65	25	FKT158-R12-07A0-1B	>=40Ω	
2.2	9	11.5	40	80	25	FKT158-R13-08A5-1B	>=40Ω	
3.7[1]	10	12	40	92	25	FKT158-R14-09A0-1B [1]	>=40Ω	

1) These models are designed for applications that operate intermittently at a load of over 80%, not exceeding 101-105%, with no or weak overload but certain requirements for driving performance. Special attention must also be paid to whether the application environment contains flocculent substances or heavy dust that affect heat dissipation. Ensure proper cabinet ventilation and maintenancein environments with heat-sensitive components or heavy d ust to preserve drive lifespan.

2) R-series compact design has fewer standard ports than C-series (see C-series wiring diagrams). Choose C-series or custom R-type if ports are insufficient. Other models' long-term overload capacity (N% overload for 1min/6min cycle) ranges 160%-110%, decreasing with higher power. C2-15kW requires professional sel ection.

Nominal ratings	
P_N	Typical motor power under rated load application
I_N	The continuously available rated current at a rated load of 40℃ . If the temperature is higher (up to 50℃), reduce the volume by 1%/1℃.
Maximum output current	
I_{max}	Maximum output current. It can last for 10 seconds at startup. In other cases, the duration depends on the temperature of the transmission.
More information and precautions regarding rated current In, mo dulation carrier, and heat dissipation air volume are listed in the remarks below the table	

Three-phase input Un=400V(380-415V), rated power valid at 400V voltage (1.5-250kW). * Select based on rated and peak load current								
Nominal ratings			Noise level	Heat diss.	Air flow	Type designation	Built-in brake chopper adapts to the minimum resistance value(Ω)	Frame size (mm)
P_N kW	I_N A	I_{max} A	dBA	kW	m^3/h			
1.5	4	5.6	40	40	25	FKT158-R15-04A0-3B	>=72Ω	R1 (W78 H210 D145)
2.2	5.6	6.8	40	76	25	FKT158-R16-05A6-3B	>=72Ω	
4.0	10.5	15	45	97	53	FKT158-C24-09A8-3B	>=72Ω	C2 (W100 H290 D200)
5.5	12.9	17	45	172	53	FKT158-C25-12A9-3B	>=72Ω	
7.5	17	21	45	210	53	FKT158-C26-17A0-3B	>=72Ω	
11	25	29	45	325	55	FKT158-C27-025A-3B	>=39Ω	
15	32	42	57	500	145	FKT158-C32-032A-3B	>=20Ω	C3 (W145 H400 D230)
18.5	38	54	57	550	145	FKT158-C33-038A-3B	>=20Ω	
22	45	64	57	660	145	FKT158-C34-045A-3B	>=20Ω	
30	61	76	57	890	145	FKT158-C42-061A-3/B	>=10Ω	C4 (W250 H400 D270)
37	72	104	60	1114	290	FKT158-C43-072A-3/B	>=10Ω	
45	87	122	60	1140	290	FKT158-C44-087A-3/B	>=8Ω	
55	105	148	60	1200	350	FKT158-C52-105A-3/B	>=5.2Ω	C5/C6 (W290 H680 D305)
75	145	178	60	1440	350	FKT158-C53-145A-3/B	>=5.2Ω	
90	169	247	60	1940	350	FKT158-C54-169A-3/B	>=3.3Ω	
110	206	287	67	2200	570	FKT158-C62-206A-3/B	>=2.3Ω	
132	246	350	68	3300	685	FKT158-C63-246A-3/B	>=2.3Ω	
160	293	418	68	3850	720	FKT158-C72-293A-3/B	>=1.7Ω	C7 (W425 H900 D350)
200	363	498	68	4100	720	FKT158-C73-363A-3/B	>=1.7Ω	
220	430	545	68	4600	720	FKT158-C74-430A-3/B	>=1.7Ω	
250[1)]	487	584	68	5100	720	FKT158-C75-487A-3/B [1)]	>=1.7Ω	

Input/Output Ports for C type frame

FKT SERIES

This series supports multiple analog/digital interfaces, encoder expansion cards, and communication modules. See the notes below for function details and R-series models.

For systems with two or more drives sharing a common DC bus, consider the startup and rectifier-side current capacity of each drive.
Note: Review the user manual or consult your local FUKUTA representative before implementation to prevent equipment damage.

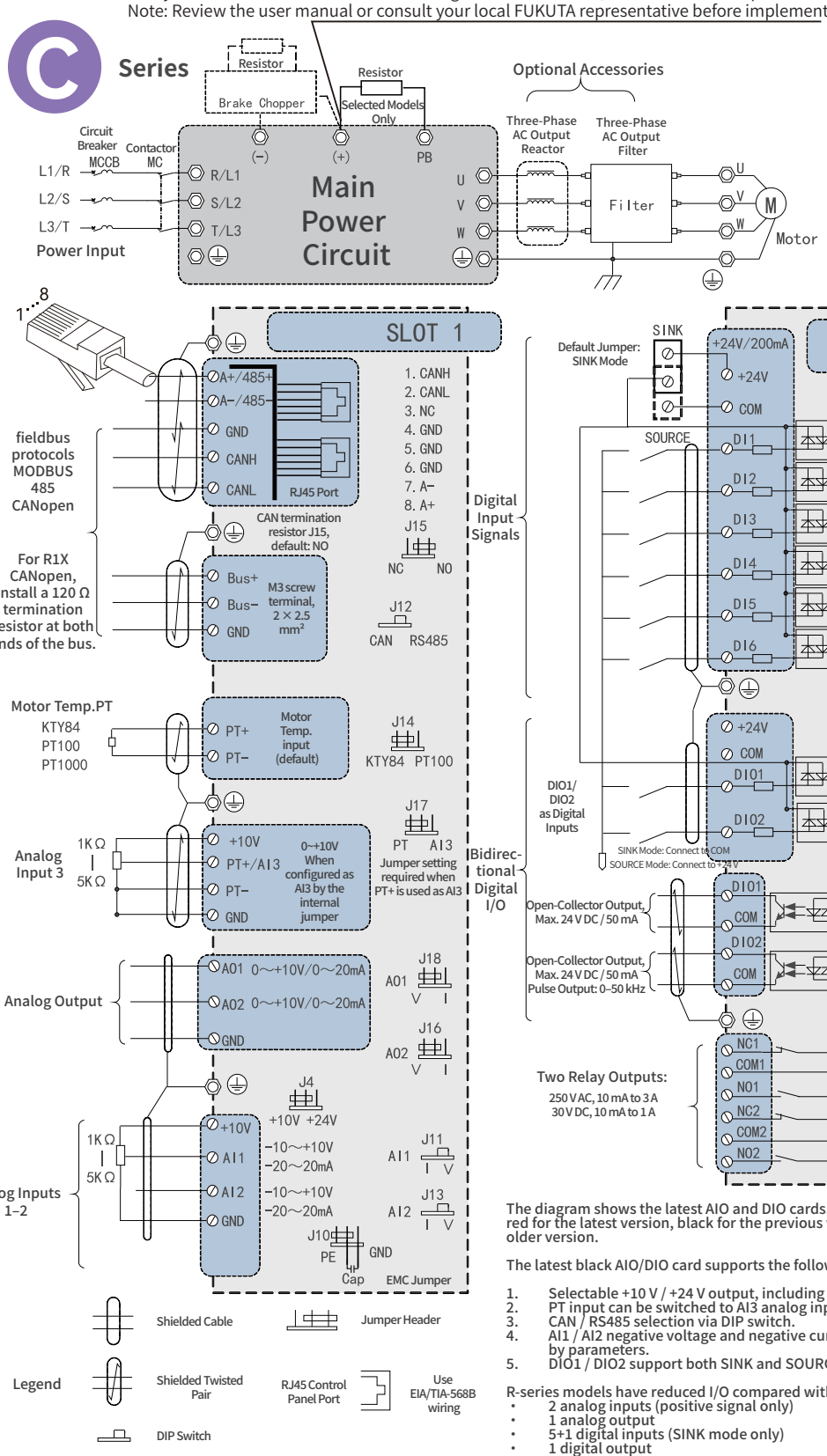

Slot3 (>=C2X)	Slot4 (>=C2X)
Slot5 (R1X)	Slot6 (R1X)
Speed Feedback Encoder Interface Slot	High–Speed Fieldbus Interface Slot

The diagram shows the latest AIO and DIO cards. Versions are color-coded: red for the latest version, black for the previous version, and green for the older version.

The latest black AIO/DIO card supports the following functions:

1. Selectable +10 V / +24 V output, including +24 V power for sensors.
2. PT input can be switched to AI3 analog input; voltage input only.
3. CAN / RS485 selection via DIP switch.
4. AI1 / AI2 negative voltage and negative current input modes are set by parameters.
5. DIO1 / DIO2 support both SINK and SOURCE input modes.

R-series models have reduced I/O compared with the above version:

- 2 analog inputs (positive signal only)
- 1 analog output
- 5+1 digital inputs (SINK mode only)
- 1 digital output
- 1 relay output
- No motor temperature sensor input
- No RJ45 port
- Some advanced functions are not included and can be added through optional expansion cards

Please confirm the detailed configuration before ordering.

Technical Notes and Recommendations

1. Make sure the drive specifications match the power supply conditions, including single-phase or three-phase input, voltage fluctuation, voltage imbalance, and other power quality requirements.
2. Because the drive input includes a high-speed rectifier and capacitor charging circuit, use a circuit breaker or fuse that complies with applicable electrical codes.
3. A properly sized AC input reactor can reduce input harmonics and improve power factor. The reactor size should be selected based on motor power and application requirements.
4. Input/output EMC filters and common-mode filters can help reduce electromagnetic interference and improve system stability and reliability.
5. An AC output reactor (dV/dt reactor) can reduce voltage spikes caused by long motor cables, helping protect motor insulation. It is especially recommended for applications with long motor cable runs or harsh electrical conditions.
6. Proper cable routing, grounding, shielding, and signal separation are essential for reliable operation. Keep power cables away from low-level signal and communication cables whenever possible.
7. Good site grounding, proper cable layout, and adequate ventilation and cooling help improve system reliability and extend drive service life.

Expansion Features and Optional Accessories

FKT SERIES

No.	Accessory	Model	Function Summary
1	Multilingual LCD Keypad	+CP86 / +CP86 (E Series)	Industrial-grade 128 × 64 dot-matrix LCD. Supports panel mounting; optional mounting bracket available.
2	High-Speed Differential Non-Isolated Encoder Card (C Type)	+TTL33	For high-speed encoder signal processing and closed-loop control. Proper grounding and wiring are required.
3	Resolver Encoder Card (C Type)	+RT35	For mainstream resolver-based motor feedback. Proper grounding and wiring are required.
4	SinCos / Differential Encoder Card (C Type)	+SN34	9+15-pin DB connector for high-accuracy SinCos or high-speed differential encoder feedback. Includes frequency division.
5	HTL Multi-Function Encoder Card (C Type)	+HTL39T (Terminal Type)*	Pluggable screw terminals; supports push-pull and open-collector inputs, 12 V supply, with frequency division.
6	TTL Multi-Function Encoder Card (C Type)	+TTL39T (Terminal Type)*	Pluggable screw terminals; supports differential encoder inputs, 5 V supply, with frequency division.
7	CTL Multi-Function Encoder Card (C Type)	+CTL39T (Terminal Type)*	Pluggable screw terminals; supports differential input, 12 V supply, frequency division, and line-break detection.
8	HTL Multi-Function Encoder Card (R1)	+HTL59	DB connector; supports push-pull and open-collector inputs, 12 V supply, with frequency division.
9	TTL Multi-Function Encoder Card (R1)	+TTL59	DB connector; supports differential encoder inputs, 5 V supply, with advanced frequency division.
10	E2 I/O Interface Card (Standard)	+ET11	6 digital inputs DI1–DI6 (NPN/PNP); DI4–DI6 support pulse input. STO via DI5/DI6. 2 PNP digital/pulse outputs DO1–DO2. 2 analog inputs AI1–AI2 (±10 V / 0–20 mA). 2 analog outputs AO1–AO2 (0–10 V / 0–20 mA). 2 relay outputs RO1–RO2, 5 A, 1NO1NC. Later versions include dedicated STO input terminals S1/S2.
11	E2 Differential Encoder Card	+EN21	4-channel absolute / 5 V high-speed differential / SinCos encoder interface. Supports EnDat, BiSS, RS485, and Hiperface. 3-row DB15 connector.
12	E2 Quadrature Encoder Card	+EN22A/B	4-channel TTL/HTL input with line-break detection. EN22A: TTL, 5 V input. EN22B: HTL, 12 V input.
13	E2 Resolver Encoder Card	+EN23	2-channel absolute / SinCos / 5 V differential input, plus 1 differential and 1 frequency-division output.
14	E2 Quadrature Encoder Card	+EN24	1 absolute / SinCos input, 1 resolver input, 1 isolated differential input with line-break detection, and 1 frequency-division feedback output.
15	E2 Absolute Encoder DP Card	+EN27	Supports PROFIBUS-DP, 1-channel 8/24 V absolute input, and 1-channel 15 V (default) / 24 V push-pull differential or open-collector HTL feedback input.
16	PROFIBUS-DP Communication Card (C Type)	+DP41	PROFIBUS-DP fieldbus interface. Model must be confirmed before ordering and matched to the drive. For C-type models only.
17	PROFINET Communication Option	+E3PN	PROFINET fieldbus option for E-series models. Add +E3PN to the order code. Factory installation only.
18	EtherCAT Communication Option	+E3EC	EtherCAT fieldbus option for E-series models. Add +E3EC to the order code. Factory installation only.
19	CANopen Communication Option	+E3CP	CANopen fieldbus option for E-series models. Order code: +E3CP. Factory-installed by default.
20	U1 Cable Clamp Assembly	+CLIPU1	Installed at the bottom of R-type drives to secure cables and provide convenient EMC grounding.
21	C2 Control Cable Clamp Assembly	+CLIPC2	Installed at the bottom of C-type drives to secure control cables and provide convenient EMC grounding.
22	C2 Control Terminal Cover	+C2CV	Covers the control terminal block to provide basic protection and improve the overall appearance.
23	LCD Keypad Door-Mount Bracket	+CPSP	Enables quick installation and removal of the keypad on a cabinet door. Secured with four PT4 × 16 screws.
24	Dual-Ended RJ45 Cable	2M / 3M	EIA/TIA-568B compliant; commonly used to extend the keypad connection to the cabinet door.
25	Enhanced Insulation for IT / TT / TN Marine Systems	+MYC	Special configuration for marine applications with high leakage-current requirements.
26	R8 Base Cart Assembly	+BL86/A	BL86 (In < 700 A) / BL8A (In = 700–1160 A); includes base dV/dt reactor, cart, and rear plug-in assembly.
27	R7/R8 Base Cart Ramp	-	Ramp for moving R7/R8 modules into or out of the cabinet.

FUKUTA®

富田電機股份有限公司
FUKUTA ELEC. & MACH. CO., LTD.

總公司 Headquarter ／銅鑼廠區Tongluo Plant
苗栗縣銅鑼鄉銅科六路6號
No 6. Tongke 6th Road., Tongluo Township, Miaoli County 366, Taiwan (R.O.C.)
Tel: 886-37-980799 Fax: 886-37-980709

豐洲廠區FengZhou Plant
台中市神岡區豐洲路301巷2-1號
No. 2-1, Ln. 301, Feng Chou Rd., Shen Kang Dist., Taichung City 429, Taiwan (R.O.C.)
Tel: 886-4-2528-8833 Fax: 886-4-2528-3979

南區營業所
台南市東區光明街201巷1號1樓
Tel: 886-6-2098-236 Fax: 886-6-2085-402

豐工廠區／中區營業所
台中市神岡區豐工南路18號
No.18, Fenggong S. Rd., Shen Kang Dist., Taichung City 429, Taiwan (R.O.C.)
Tel: 886-4-2515-9568 Fax: 886-4-2515-9538

北區營業所
桃園市龜山區華亞二路29號2樓
Tel: 886-3-3272909 Fax: 886-3-3275158

日本営業窓口　株式会社YTK
〒556-0011 大阪府大阪市浪速区難波中2-10-70
なんばパークスタワー19階
Tel: 81-06-7662-8687 Fax: 81-06-6777-7941

富田官網　富田型錄

© 2026 FUKUTA ELEC. & MACH. CO., LTD. ALL RIGHT RESERVED.　富田電機股份有限公司　© 版權所有 2026.06